| Last rev | Modification | Date | Created by | Checked by |
|---|---|---|---|---|
| 01 | Drawing created | 26-4-2013 | R. Wouters | F. Verhees |

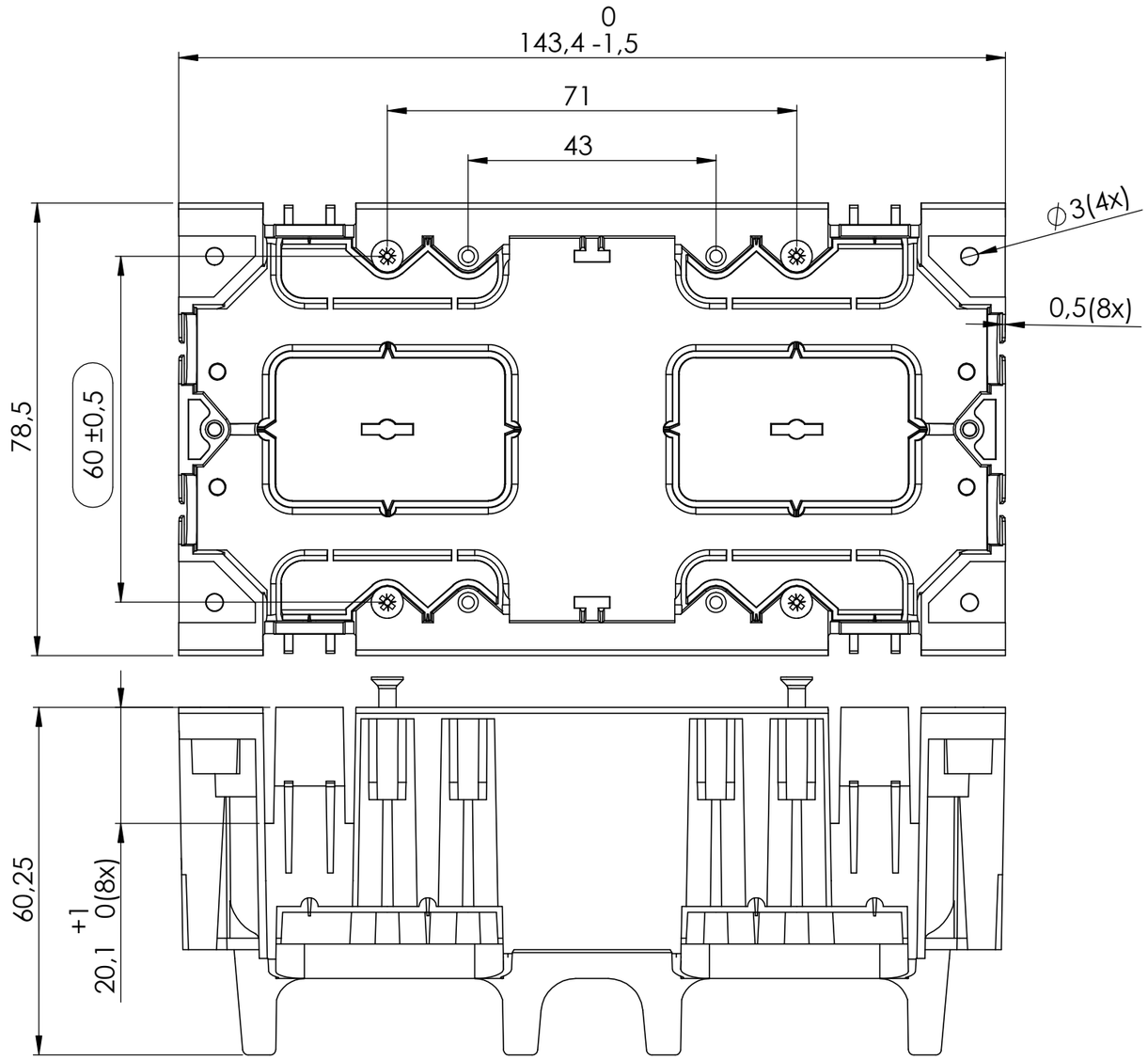


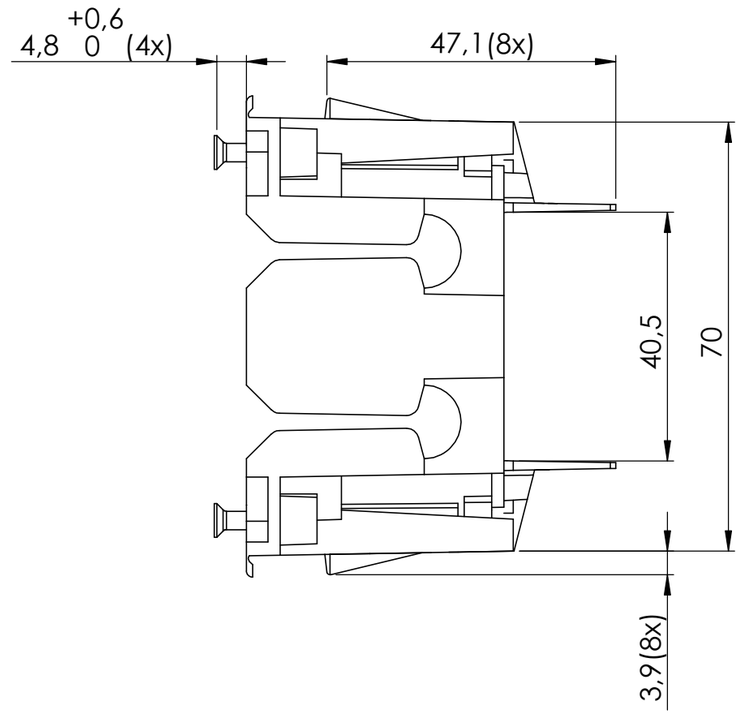


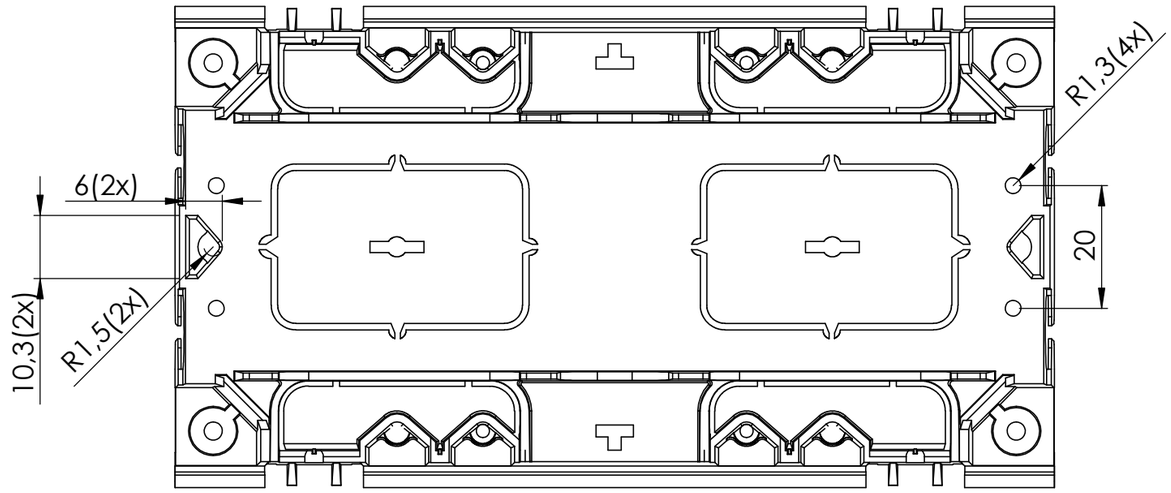


| Pos | Qty | Description | Part | Remarks |
|---|---|---|---|---|
| 2 | 4 | P.v. Draadvormschoef M3x16 | 123 334 04 | |
| 1 | 1 | New Click-it | 24073374 | - |

General tolerances:
Linear tolerance ±0,05mm
-
-

Remarks:
= important

Material:

Finishing:

Project/family:

Description:

Design status: Released | Variant: | Sheet: 1/1

First angle:
Scale: 1:1
Paper size: A3
Weight: Kg
Volume: cm³
Surface area: cm²
Design site: Boxtel
Drawing number: 351339

legrand

PROPERTY OF LEGRAND NEDERLAND BV IN BOXTEL. NO PART OF THIS DOCUMENT MAY BE REPRODUCED IN ANY FORM OR BY ANY MEANS WITHOUT PRIOR PERMISSION IN WRITING FROM THE PROPRIETOR.

File: 351339